3U Open VPX BACKPLANE **BKP3-CEN09-15.2.17-3**	**VITA 46** **VITA 65**	

Key figures:

- Compliant to VITA 46.0 baseline specification
- Compilant to VITA 65 Open VPX
- 9 Slots VPX, 8 Payload Slots , 1 Switch Slots
- M3 studs and ATX connector for powerentry
- PCB size 128.5mm x 228.16mm x 5.4 mm
- 5 HP from slot to slot (25.40 mm)
- Flexible keying and alignment mechanism
- with geografical address pins
- Reference clock
- Battery backup option setting by Jumper X5. Vbat external or connected to 3.3 AUX
- System Management Interface on the backplane (I2C1, I2C2)
- Non-Volatile Memory Read Only signal set by Jumper BR1
- Power Consumption: VS1:VS2:VS3 = 126A : 126A : 135A
- System Reset
- Operating temperature: -40° - +85°C
- Storage temperature: -55°C - +85°C
- Flammability rating: UL94-V0
- Optional with: +5V termination
- Other configurations on request

- **Order number: B193811760**

Front side

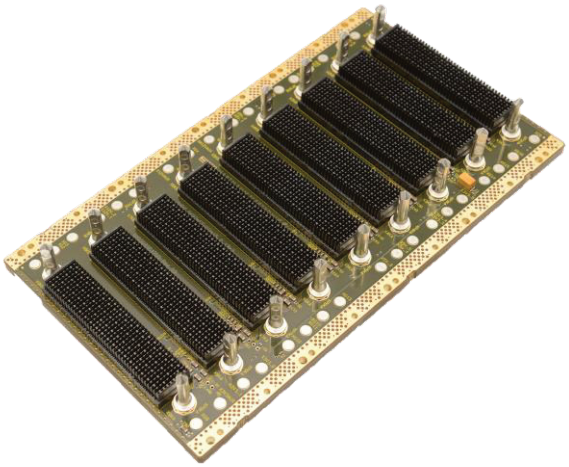

Rear side

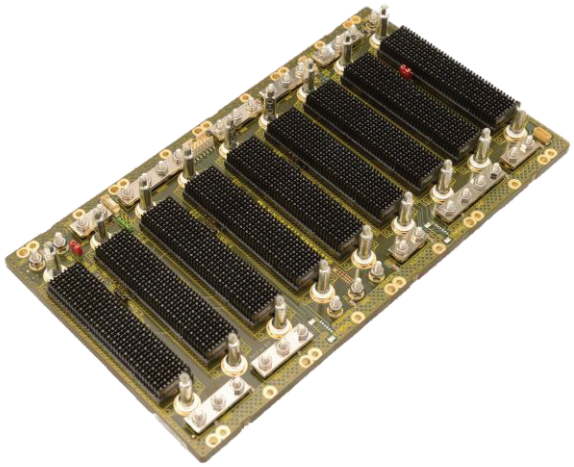

3U Open VPX BACKPLANE BKP3-CEN09-15.2.17-3	VITA 46 VITA 65	

1) Topology: BKP3-CEN09-15.2.17-n, (8 Payloads + 1 Switch)

Profil Switch slot 4: SLT3-SWH-6F8U-14.4.9
Profil Payload slot 1: SLT3-PAY-3F2U-14.2.13
Profil Payload slots 2, 3, 5: SLT3-PAY-1F2U-14.2.12
Profil Payload slots 6-9: SLT3-PAY-1F2F2U-14.2.2

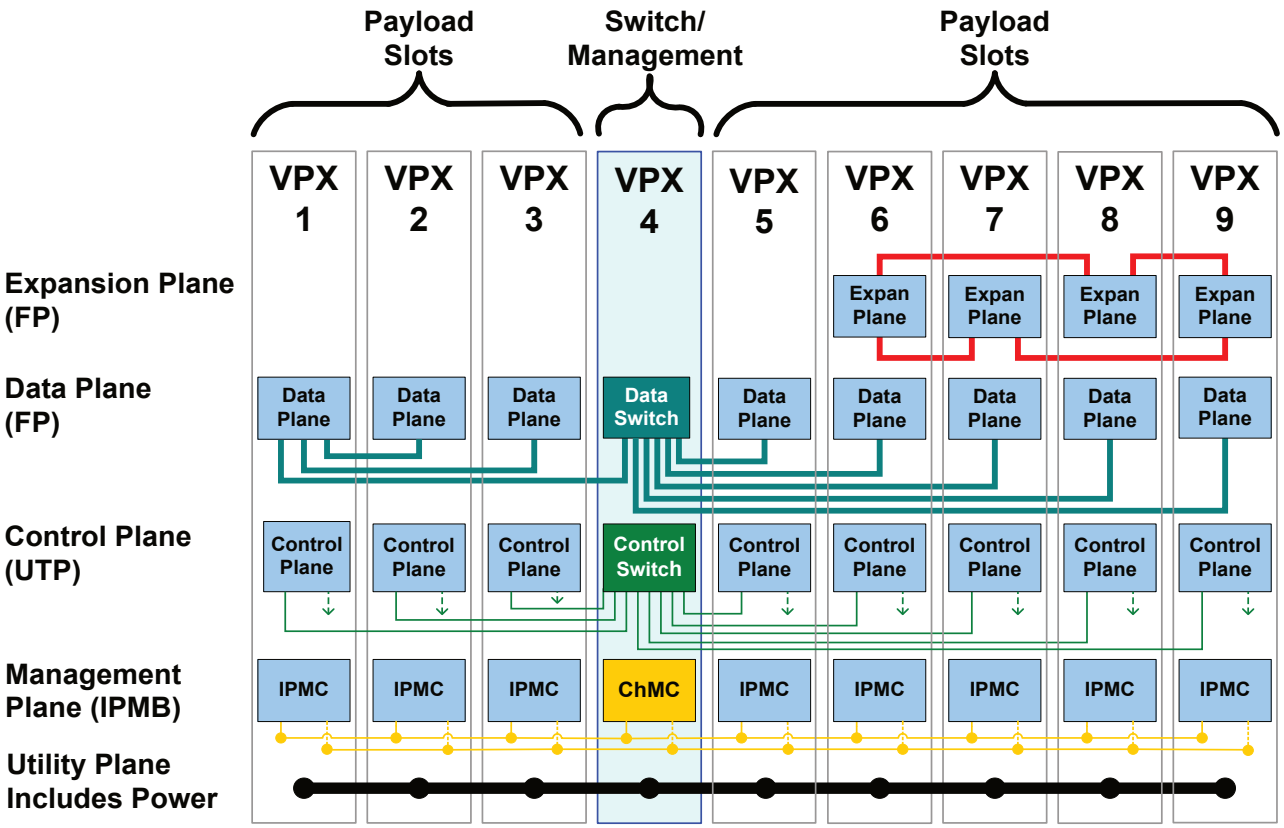



Expansion Plane Lanes of BKP3-CEN09-15.2.17-n

Expansion Plane lanes
Payload
slots 6-9 of 9-slot
backplane
(FP = 4 lanes)

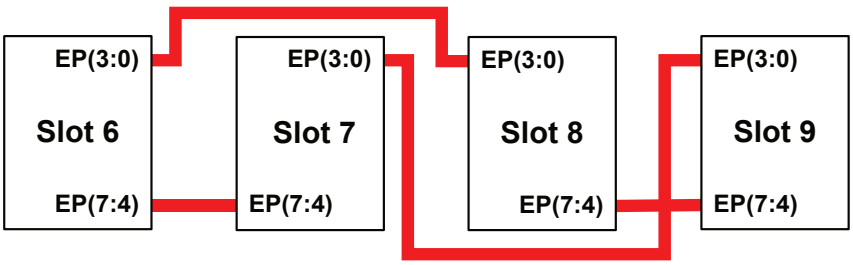

Data Plane Port connections BKP3-CEN08-15.2.15-n

Logical Payload Slot	Payload Data Plane Port	Switch Data Plane Port
1	DP01	DP01
5	DP01	DP02
6	DP01	DP03
7	DP01	DP04
8	DP01	DP05
9	DP01	DS01

Logical Payload Slot	Payload Data Plane Port	Logical Payload Slot 1
2	DP01	DP03
3	DP01	DP02



Control Plane Port connections BKP3-CEN09-15.2.17-n

Logical Payload Slot	Payload Control Plane Port	Switch Control Plane Port
1	CPutp01	CPutp01
1	CPutp02	No Connect, can go to RTM
2	CPutp01	CPutp02
2	CPutp02	No Connect, can go to RTM
3	CPutp01	CPutp03
3	Cputp02	No Connect, can go to RTM
5	CPutp01	CPutp04
5	CPutp02	No Connect, can go to RTM
6	CPutp01	CPutp05
6	CPutp02	No Connect, can go to RTM
7	CPutp01	CPutp06
7	CPutp02	No Connect, can go to RTM
8	CPutp01	CPutp07
8	CPutp02	No Connect, can go to RTM
9	CPutp01	CSutp01
9	CPutp02	No Connect, can go to RTM



2) Drawings

Front side

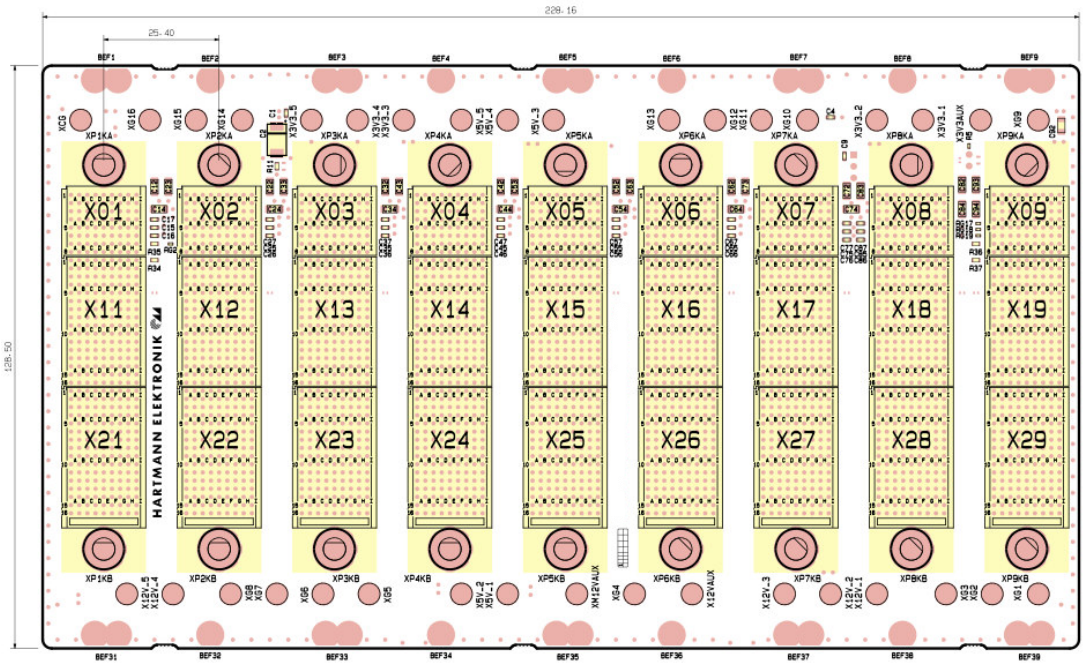

Rear side

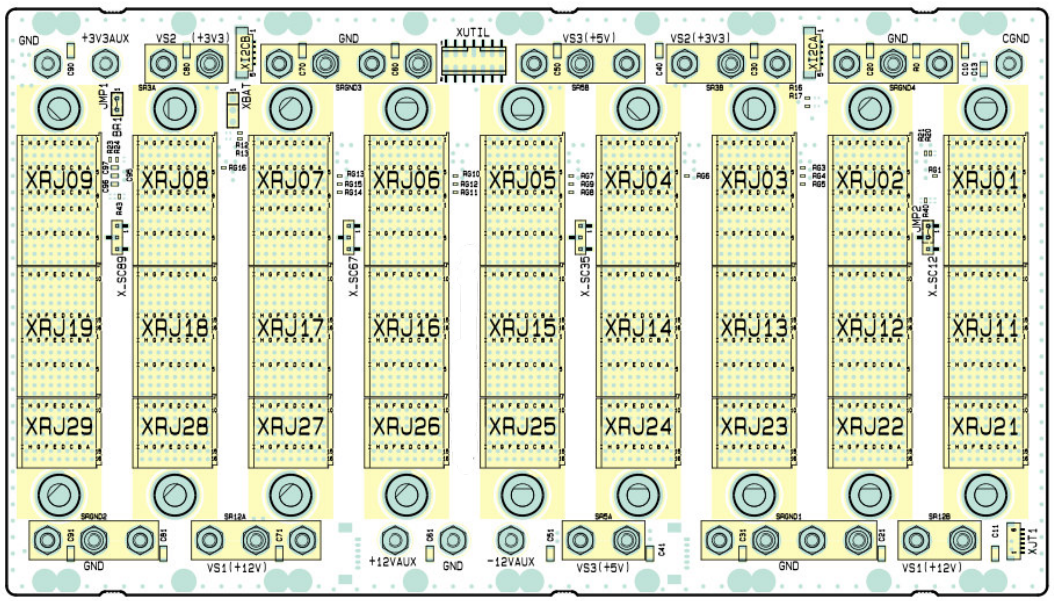



3) Pin Assignment

Utility Plane Signals on P0

	Row G	Row F	Row E	Row D	Row C	Row B	Row A
1	Vs1	Vs1	Vs1	No Pad*	Vs2	Vs2	Vs2
2	Vs1	Vs1	Vs1	No Pad*	Vs2	Vs2	Vs2
3	Vs3	Vs3	Vs3	No Pad*	Vs3	Vs3	Vs3
4	SM2	SM3	GND	-12V_Aux	GND	SYSRESET*	NVMRO
5	GAP*	GA4*	GND	3.3V_Aux	GND	SM0	SM1
6	GA3*	GA2*	GND	+12V_Aux	GND	GA1*	GA0*
7	TCK	GND	TDO	TDI	GND	TMS	TRST*
8	GND	REF_CLK-	REF_CLK+	GND	AUX_CLK-	AUX_CLK+	GND

Utility Plane Signals on J0

	Row i	Row h	Row g	Row f	Row e	Row d	Row c	Row b	Row a
1	Vs1	Vs1	Vs1	Vs1	No Pad*	Vs2	Vs2	Vs2	Vs2
2	Vs1	Vs1	Vs1	Vs1	No Pad*	Vs2	Vs2	Vs2	Vs2
3	Vs3	Vs3	Vs3	Vs3	No Pad*	Vs3	Vs3	Vs3	Vs3
4	GND	SM2	SM3	GND	-12V_Aux	GND	SYSRESET*	NVMRO	GND
5	GND	GAP*	GA4*	GND	3.3V_Aux	GND	SM0	SM1	GND
6	GND	GA3*	GA2*	GND	+12V_Aux	GND	GA1*	GA0*	GND
7	TCK	GND	GND	TDO	TDI	GND	GND	TMS	TRST*
8	GND	REF_CLK-	REF_CLK+	GND	GND	AUX_CLK-	AUX_CLK+	GND	GND



Payload Slot-1 Profile SLT3-PAY-3F2U 14.2.13 — P1 & J1

Plug-in module P1			Row G	Row F	Row E Even	Row E Odd	Row D	Row C	Row B Even	Row B Odd	Row A
Bplane J1			Row i	Row h	Row g	Row f	Row e	Row d	Row c	Row b	Row a
1	Data Plane Port 1	X8 1x4 / 2x2 / 4x1	GDiscrete1	GND	GND-J1	DP01-TD0-	DP01-TD0+	GND	GND-J1	DP01-RD0-	DP01-RD0+
2			GND	DP01-TD1-	DP01-TD1+	GND-J1	GND	DP01-RD1-	DP01-RD1+	GND-J1	GND
3			P1-VBAT	GND	GND-J1	DP01-TD2-	DP01-TD2+	GND	GND-J1	DP01-RD2-	DP01-RD2+
4			GND	DP01-TD3-	DP01-TD3+	GND-J1	GND	DP01-RD3-	DP01-RD3+	GND-J1	GND
5	Data Plane Port 2	X8 1x4 / 2x2 / 4x1	SYS_CON*	GND	GND-J1	DP02-TD0-	DP02-TD0+	GND	GND-J1	DP02-RD0-	DP02-RD0+
6			GND	DP02-TD1-	DP02-TD1+	GND-J1	GND	DP02-RD1-	DP02-RD1+	GND-J1	GND
7			Reserved	GND	GND-J1	DP02-TD2-	DP02-TD2+	GND	GND-J1	DP02-RD2-	DP02-RD2+
8			GND	DP02-TD3-	DP02-TD3+	GND-J1	GND	DP02-RD3-	DP02-RD3+	GND-J1	GND
9	Data Plane Port 3	1x4 / 2x2 / 4x1	UD	GND	GND-J1	DP03-TD0-	DP03-TD0+	GND	GND-J1	DP03-RD0-	DP03-RD0+
10			GND	DP03-TD1-	DP03-TD1+	GND-J1	GND	DP03-RD1-	DP03-RD1+	GND-J1	GND
11			UD	GND	GND-J1	DP03-TD2-	DP03-TD2+	GND	GND-J1	DP03-RD2-	DP03-RD2+
12			GND	DP03-TD3-	DP03-TD3+	GND-J1	GND	DP03-RD3-	DP03-RD3+	GND-J1	GND
13	User Def.		UD	GND	GND-J1	UD	UD	GND	GND-J1	UD	UD
14			GND	UD	UD	GND-J1	GND	UD	UD	GND-J1	GND
15	Control Plane		Maskable Reset*	GND	GND-J1	CPutp02-TD-	CPutp02-TD+	GND	GND-J1	CPutp02-RD-	CPutp02-RD+
16			GND	CPutp01-TD-	CPutp01-TD+	GND-J1	GND	CPutp01-RD-	CPutp01-RD+	GND-J1	GND

Payload Slot-1 Profile SLT3-PAY-3F2U 14.2.13 — P2 & J2

Plug-in mod P2	Row G	Row F	Row E Even	Row E Odd	Row D	Row C	Row B Even	Row B Odd	Row A
Bplane J2	Row i	Row h	Row g	Row f	Row e	Row d	Row c	Row b	Row a

This connector is all User Defined pins.



Payload Slot-2, 3, 5 Profile SLT3-PAY-3F2U 14.2.13 — P1 & J1

Plug-in module P1			Row G	Row F	Row E Even	Row E Odd	Row D	Row C	Row B Even	Row B Odd	Row A
Bplane J1			Row i	Row h	Row g	Row f	Row e	Row d	Row c	Row b	Row a
1	Data Plane Port 1	1x4 / 2x2 / 4x1	GDiscrete1	GND	GND-J1	DP01-TD0-	DP01-TD0+	GND	GND-J1	DP01-RD0-	DP01-RD0+
2			GND	DP01-TD1-	DP01-TD1+	GND-J1	GND	DP01-RD1-	DP01-RD1+	GND-J1	GND
3			P1-VBAT	GND	GND-J1	DP01-TD2-	DP01-TD2+	GND	GND-J1	DP01-RD2-	DP01-RD2+
4			GND	DP01-TD3-	DP01-TD3+	GND-J1	GND	DP01-RD3-	DP01-RD3+	GND-J1	GND
5	User Defined		SYS_CON*	GND	GND-J1	UD	UD	GND	GND-J1	UD	UD
6			GND	UD	UD	GND-J1	GND	UD	UD	GND-J1	GND
7			Reserved	GND	GND-J1	UD	UD	GND	GND-J1	UD	UD
8			GND	UD	DU	GND-J1	GND	UD	UD	GND-J1	GND
9			UD	GND	GND-J1	UD	UD	GND	GND-J1	UD	UD
10			GND	UD	UD	GND-J1	GND	UD	UD	GND-J1	GND
11			UD	GND	GND-J1	UD	UD	GND	GND-J1	UD	UD
12			GND	UD	UD	GND-J1	GND	UD	UD	GND-J1	GND
13			UD	GND	GND-J1	UD	UD	GND	GND-J1	UD	UD
14			GND	UD	UD	GND-J1	GND	UD	UD	GND-J1	GND
15	Control Plane		Maskable Reset*	GND	GND-J1	CPutp02-TD-	CPutp02-TD+	GND	GND-J1	CPutp02-RD-	CPutp02-RD+
16			GND	CPutp01-TD-	CPutp01-TD+	GND-J1	GND	CPutp01-RD-	CPutp01-RD+	GND-J1	GND

Payload Slot-2, 3, 5 Profile SLT3-PAY-3F2U 14.2.13 — P2 & J2

Plug-in mod P2	Row G	Row F	Row E Even	Row E Odd	Row D	Row C	Row B Even	Row B Odd	Row A
Bplane J2	Row i	Row h	Row g	Row f	Row e	Row d	Row c	Row b	Row a

This connector is all User Defined pins.



Payload Slot-6-9 Profile SLT3-PAY-1F2F2U 14.2.2 — P1 & J1

Plug-In Module P1			Row G	Row F	Row E Even	Row E Odd	Row D	Row C	Row B Even	Row B Odd	Row A
Bplane J1			Row i	Row h	Row g	Row f	Row e	Row d	Row c	Row b	Row a
1	Data Plane Port 1	x4 / 2x2 / 4x1	GDiscrete1	GND	GND-J1	DP01-TD0-	DP01-TD0+	GND	GND-J1	DP01-RD0-	DP01-RD0+
2			GND	DP01-TD1-	DP01-TD1+	GND-J1	GND	DP01-RD1-	DP01-RD1+	GND-J1	GND
3			P1-VBAT	GND	GND-J1	DP01-TD2-	DP01-TD2+	GND	GND-J1	DP01-RD2-	DP01-RD2+
4			GND	DP01-TD3-	DP01-TD3+	GND-J1	GND	DP01-RD3-	DP01-RD3+	GND-J1	GND
5	Expan. Plane Port 1	x4 / 2x2 / 4x1	SYS_CON*	GND	GND-J1	EP00-TD-	EP00-TD+	GND	GND-J1	EP00-RD-	EP00-RD+
6			GND	EP01-TD-	EP01-TD+	GND-J1	GND	EP01-RD-	EP01-RD+	GND-J1	GND
7			Reserved	GND	GND-J1	EP02-TD-	EP02-TD+	GND	GND-J1	EP02-RD-	EP02-RD+
8			GND	EP03-TD-	EP03-TD+	GND-J1	GND	EP03-RD-	EP03-RD+	GND-J1	GND
9	Expan. Plane Port 2	x4 / 2x2 / 4x1	UD	GND	GND-J1	EP04-TD-	EP04-TD+	GND	GND-J1	EP04-RD-	EP04-RD+
10			GND	EP05-TD-	EP05-TD+	GND-J1	GND	EP05-RD-	EP05-RD+	GND-J1	GND
11			UD	GND	GND-J1	EP06-TD-	EP06-TD+	GND	GND-J1	EP06-RD-	EP06-RD+
12			GND	EP07-TD-	EP07-TD+	GND-J1	GND	EP07-RD-	EP07-RD+	GND-J1	GND
13	User Defined		UD	GND	GND-J1	UD	UD	GND	GND-J1	UD	UD
14			GND	UD	UD	GND-J1	GND	UD	UD	GND-J1	GND
15	Control Plane		Maskable Reset*	GND	GND-J1	CPutp02-TD-	CPutp02-TD+	GND	GND-J1	CPutp02-RD-	CPutp02-RD+
16			GND	CPutp01-TD-	CPutp01-TD+	GND-J1	GND	CPutp01-RD-	CPutp01-RD+	GND-J1	GND

Payload Slot-6-9 Profile SLT3-PAY-1F2F2U 14.2.2 — P2 & J2

Plug-in mod P2	Row G	Row F	Row E Even	Row E Odd	Row D	Row C	Row B Even	Row B Odd	Row A
Bplane J2	Row i	Row h	Row g	Row f	Row e	Row d	Row c	Row b	Row a

This connector is all User Defined pins.



Switch Slot Profile SLT3-SWH-6F8U 14.4.9 — P1 & J1

Plug-In Module P1		Row G	Row F	Row E Even	Row E Odd	Row D	Row C	Row B Even	Row B Odd	Row A
Bplane J1		Row i	Row h	Row g	Row f	Row e	Row d	Row c	Row b	Row a
1	Data Plane Port 1	GDiscrete1	GND	GND-J1	DP01-TD0-	DP01-TD0+	GND	GND-J1	DP01-RD0-	DP01-RD0+
2		GND	DP01-TD1-	DP01-TD1+	GND-J1	GND	DP01-RD1-	DP01-RD1+	GND-J1	GND
3		P1-VBAT	GND	GND-J1	DP01-TD2-	DP01-TD2+	GND	GND-J1	DP01-RD2-	DP01-RD2+
4		GND	DP01-TD3-	DP01-TD3+	GND-J1	GND	DP01-RD3-	DP01-RD3+	GND-J1	GND
5	Data Plane Port 2	SYS_CON*	GND	GND-J1	DP02-TD0-	DP02-TD0+	GND	GND-J1	DP02-RD0-	DP02-RD0+
6		GND	DP02-TD1-	DP02-TD1+	GND-J1	GND	DP02-RD1-	DP02-RD1+	GND-J1	GND
7		Reserved	GND	GND-J1	DP02-TD2-	DP02-TD2+	GND	GND-J1	DP02-RD2-	DP02-RD2+
8		GND	DP02-TD3-	DP02-TD3+	GND-J1	GND	DP02-RD3-	DP02-RD3+	GND-J1	GND
9	Data Plane Port 3	UD	GND	GND-J1	DP03-TD0-	DP03-TD0+	GND	GND-J1	DP03-RD0-	DP03-RD0+
10		GND	DP03-TD1-	DP03-TD1+	GND-J1	GND	DP03-RD1-	DP03-RD1+	GND-J1	GND
11		UD	GND	GND-J1	DP03-TD2-	DP03-TD2+	GND	GND-J1	DP03-RD2-	DP03-RD2+
12		GND	DP03-TD3-	DP03-TD3+	GND-J1	GND	DP03-RD3-	DP03-RD3+	GND-J1	GND
13	Data Plane Port 4	UD	GND	GND-J1	DP04-TD0-	DP04-TD0+	GND	GND-J1	DP04-RD0-	DP04-RD0+
14		GND	DP04-TD1-	DP04-TD1+	GND-J1	GND	DP04-RD1-	DP04-RD1+	GND-J1	GND
15		Maskable Reset*	GND	GND-J1	DP04-TD2-	DP04-TD2+	GND	GND-J1	DP04-RD2-	DP04-RD2+
16		GND	DP04-TD3-	DP04-TD3+	GND-J1	GND	DP04-RD3-	DP04-RD3+	GND-J1	GND

Switch Slot Profile SLT3-SWH-6F8U 14.4.9 — P2 & J2

Plug-In Module P2		Row G	Row F	Row E Even	Row E Odd	Row D	Row C	Row B Even	Row B Odd	Row A
Bplane J2		Row i	Row h	Row g	Row f	Row e	Row d	Row c	Row b	Row a
1	Data Plane Port 5	UD	GND	GND-J2	DP05-TD0-	DP05-TD0+	GND	GND-J2	DP05-RD0-	DP05-RD0+
2		GND	DP05-TD1-	DP05-TD1+	GND-J2	GND	DP05-RD1-	DP05-RD1+	GND-J2	GND
3		UD	GND	GND-J2	DP05-TD2-	DP05-TD2+	GND	GND-J2	DP05-RD2-	DP05-RD2+
4		GND	DP05-TD3-	DP05-TD3+	GND-J2	GND	DP05-RD3-	DP05-RD3+	GND-J2	GND
5	Data Plane Port 6	UD	GND	GND-J2	DS01-TD0-	DS01-TD0+	GND	GND-J2	DS01-RD0-	DS01-RD0+
6		GND	DS01-TD1-	DS01-TD1+	GND-J2	GND	DS01-RD1-	DS01-RD1+	GND-J2	GND
7		UD	GND	GND-J2	DS01-TD2-	DS01-TD2+	GND	GND-J2	DS01-RD2-	DS01-RD2+
8		GND	DS01-TD3-	DS01-TD3+	GND-J2	GND	DS01-RD3-	DS06-RD3+	GND-J2	GND
9	Control Plane Ports 1 - 8	UD	GND	GND-J2	CSutp01-TD-	CSutp01-TD+	GND	GND-J2	CSutp01-RD-	CSutp01-RD+
10		GND	CPutp05-TD-	CPutp05-TD+	GND-J2	GND	CPutp05-RD-	CPutp05-RD+	GND-J2	GND
11		UD	GND	GND-J2	CPutp04-TD-	CPutp04-TD+	GND	GND-J2	CPutp04-RD-	CPutp04-RD+
12		GND	CPutp03-TD-	CPutp03-TD+	GND-J2	GND	CPutp03-RD-	CPutp03-RD+	GND-J2	GND
13		UD	GND	GND-J2	CPutp02-TD-	CPutp02-TD+	GND	GND-J2	CPutp02-RD-	CPutp02-RD+
14		GND	CPutp01-TD-	CPutp01-TD+	GND-J2	GND	CPutp01-RD-	CPutp01-RD+	GND-J2	GND
15		UD	GND	GND-J2	Cputp07-TD-	Cputp07-TD+	GND	GND-J2	Cputp07-RD-	Cputp07-RD+
16		GND	CPutp06-TD-	CPutp06-TD+	GND-J2	GND	CPutp06-RD-	CPutp06-RD+	GND-J2	GND



4) I2C connector

There are 2 connectors for system- management XI2CA and XI2CB.

Part.Nb: X-MOL-53398-0510

For customer specific board assembly are Zero-Ohm resistors available.

Usable voltages for I2C are 3.3V-AUX

XI2CA / B

1	IPMB_SCL
2	GND
3	IPMBSDA
4	IPMB_PWR
5	NC

5) Power Studs M3

The main operating voltages (+12V, +3.3V, +5V) and GND are supplied with M3 screw terminals. The auxiliary operating voltages are supplied via M3 screw terminals.

Optimal daughter board supply and trouble-free operation are ensured by the arrangement of the feed modules on the backplane.

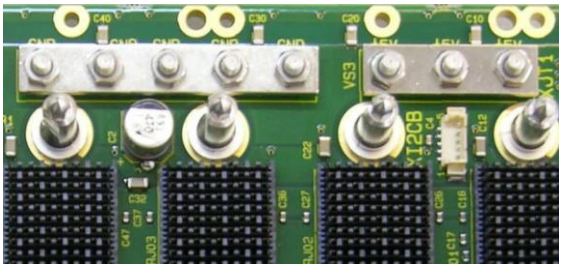

6) VBAT

Normally a battery voltage with approximately 3V is available at Pin VBAT of connector VPX-J1.

The voltage is externally accessible with connector X5 **or** internally using 3.3V_AUX by closing Jumper BR1.

VBAT

1	GND
2	+VBAT
2	+3.3V_AUX

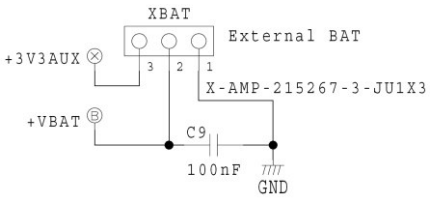

7) NVMRO

If Jumper BR1 is closed NVRMO is set to memory writeable.

BR1

1	NVMRO
2	GND



8) SYSCON

By setting the signal Syscon to GND the system slot is defined. In general the system slot is slot 1.
We offer 2 options for setting:
- Jumper (standard)
- 0 Ohm Resistor for rugged applications

JMP2

1	SYSCON1
2	GND
3	SYSCON2

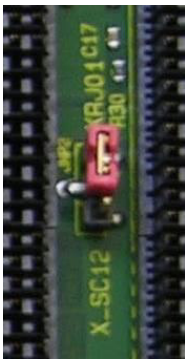

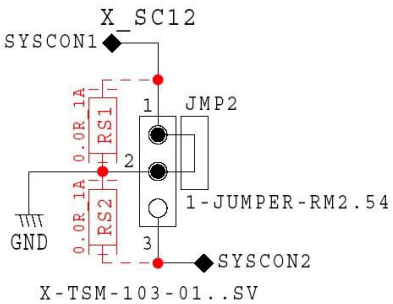

9) Utility

Special signals like sense signals for connection to the power supply are at the connector XUTIL.

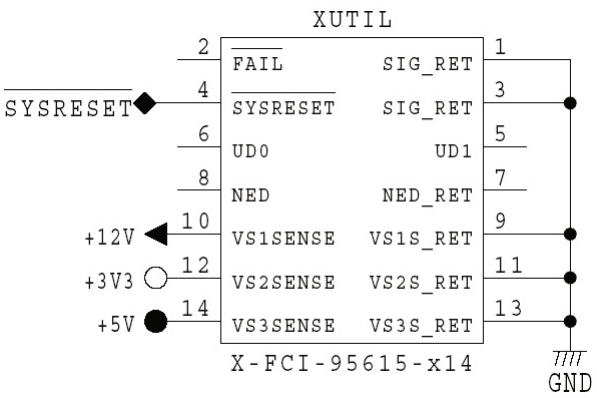

All data is for information purposes only and not guaranteed for legal purposes. Information has been carefully checked and is believed to be accurate; however, no responsibility is assumed for inaccuracies. Specifications are subject to change without notice.